Filter Specs		
Model	PSF-1008 200N	
Replacement Media	FMT-10-S20	
Connection Size	2.0 inch	
Connection Type	FNPT	
Max Pressure	232 PSIG	
Capacity @ 100 PSI	408	SCFM
Micron Level	0.2 Micron Abs	

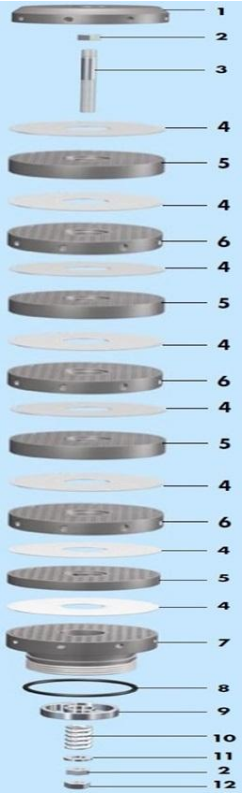

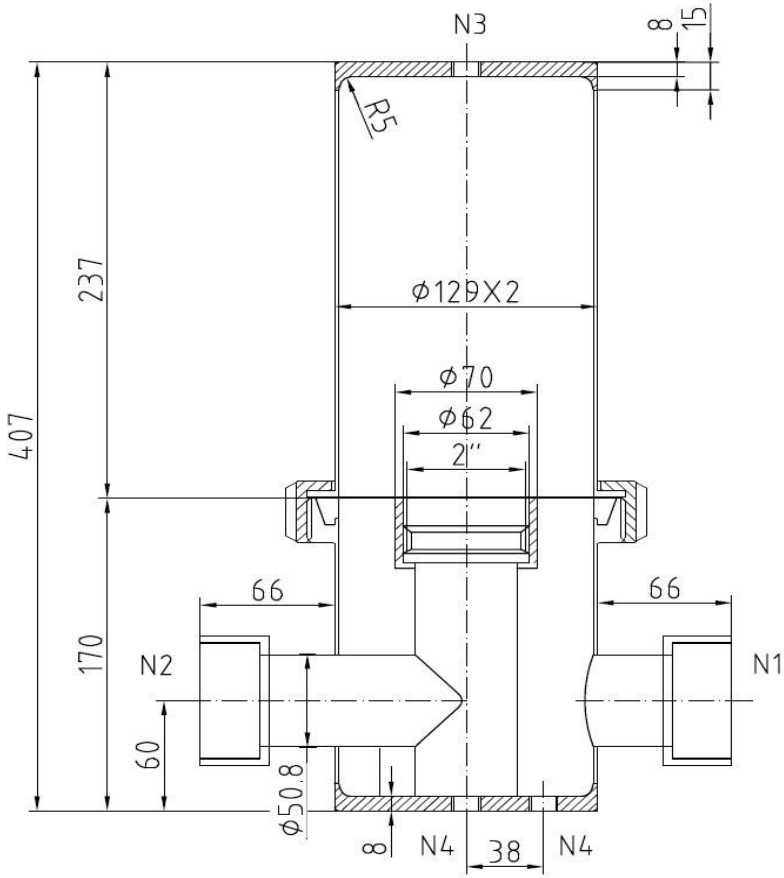

MICROPURE® FILTRATION

Date	Drawing No.
12/1/2024	PSF-1008200N