Filter Specs	
Model	PDF-0808 200T
Replacement media	FMS-08-003
Connection Size	2.0 inch
Connection Type	Tri-Clamp
Max Pressure	232 psig
Capacity @ 100 psi	975 lb/hr
Micron Level	3 micron Abs

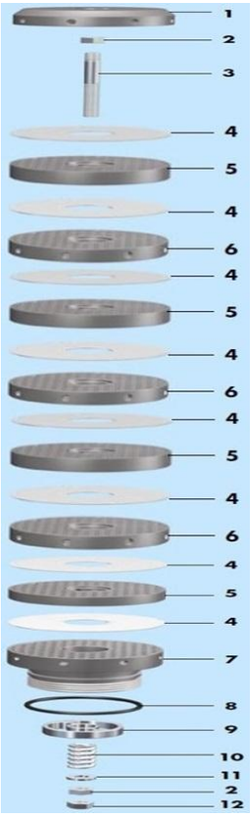

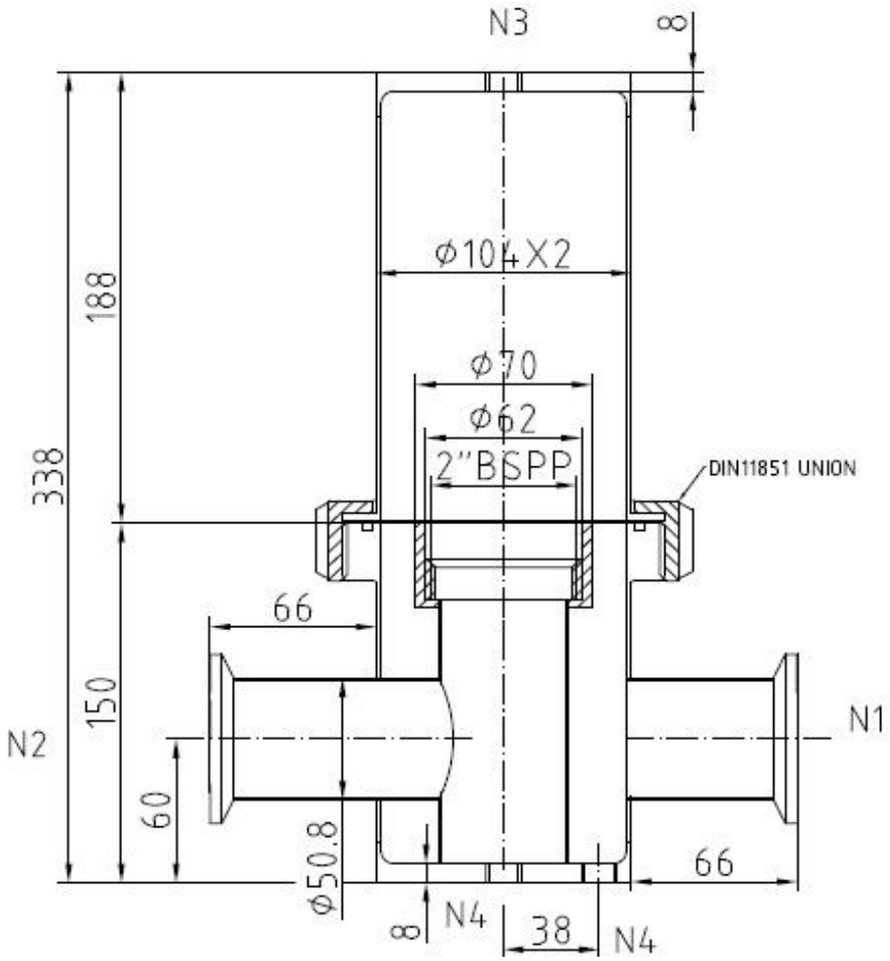

MICROPURE® FILTRATION

Date	Drawing No.
12/1/2024	PDF-0808200T