Filter Specs	
Model	PDF-0806 100T
Replacement media	FMS-08-003
Connection Size	1.0 inch
Connection Type	Tri-Clamp
Max Pressure	232 psig
Capacity @ 100 psi	825 lb/hr
Micron Level	3 Micron Abs

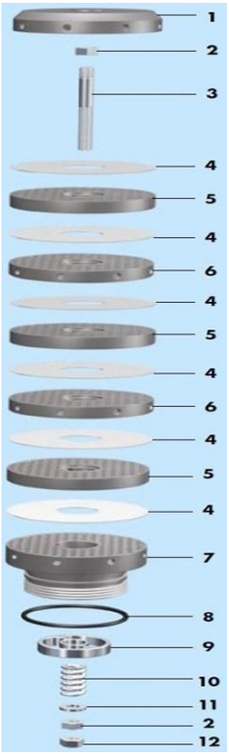

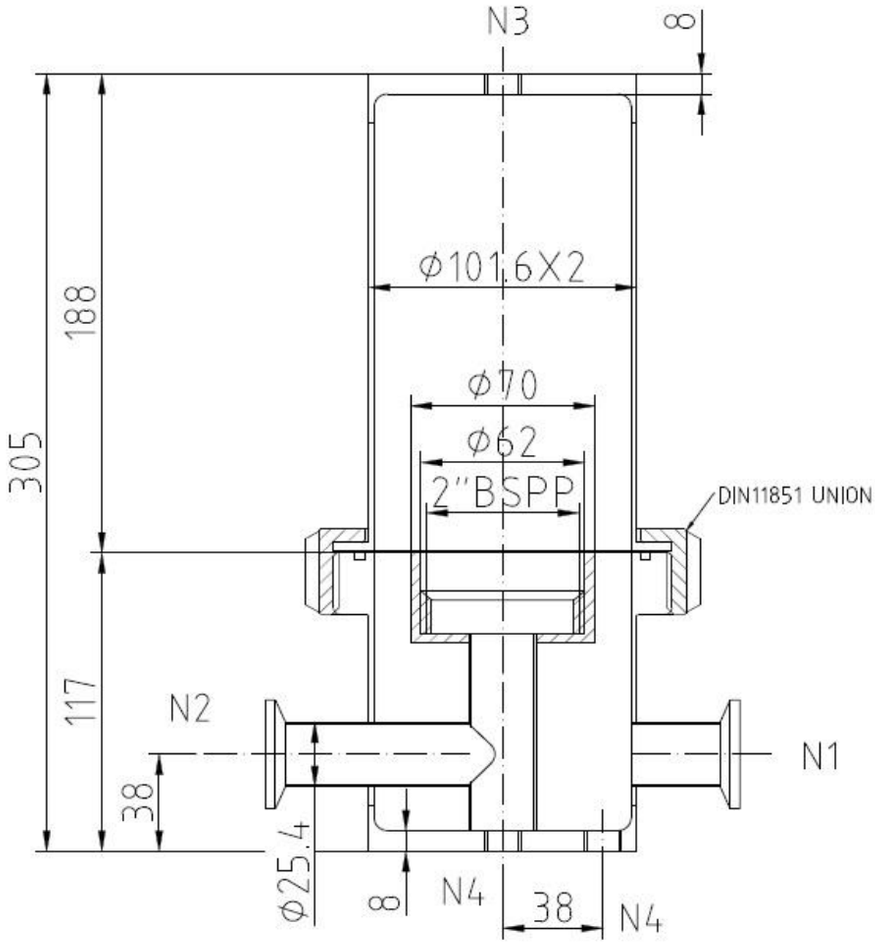

MICROPURE® FILTRATION

Date	Drawing No.
12/1/2024	PDF-0806100T