Filter Specs	
Model	PDF-0802 100T
Replacement media	FMS-08-003
Connection Size	1.0 inch
Connection Type	Tri-Clamp
Max Pressure	232 psig
Capacity @ 100 psi	300 lb/hr
Micron Level	3 Micron Abs

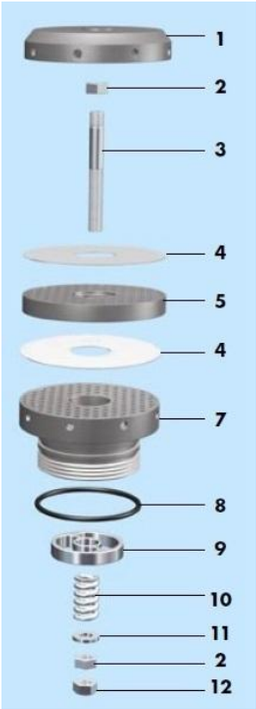

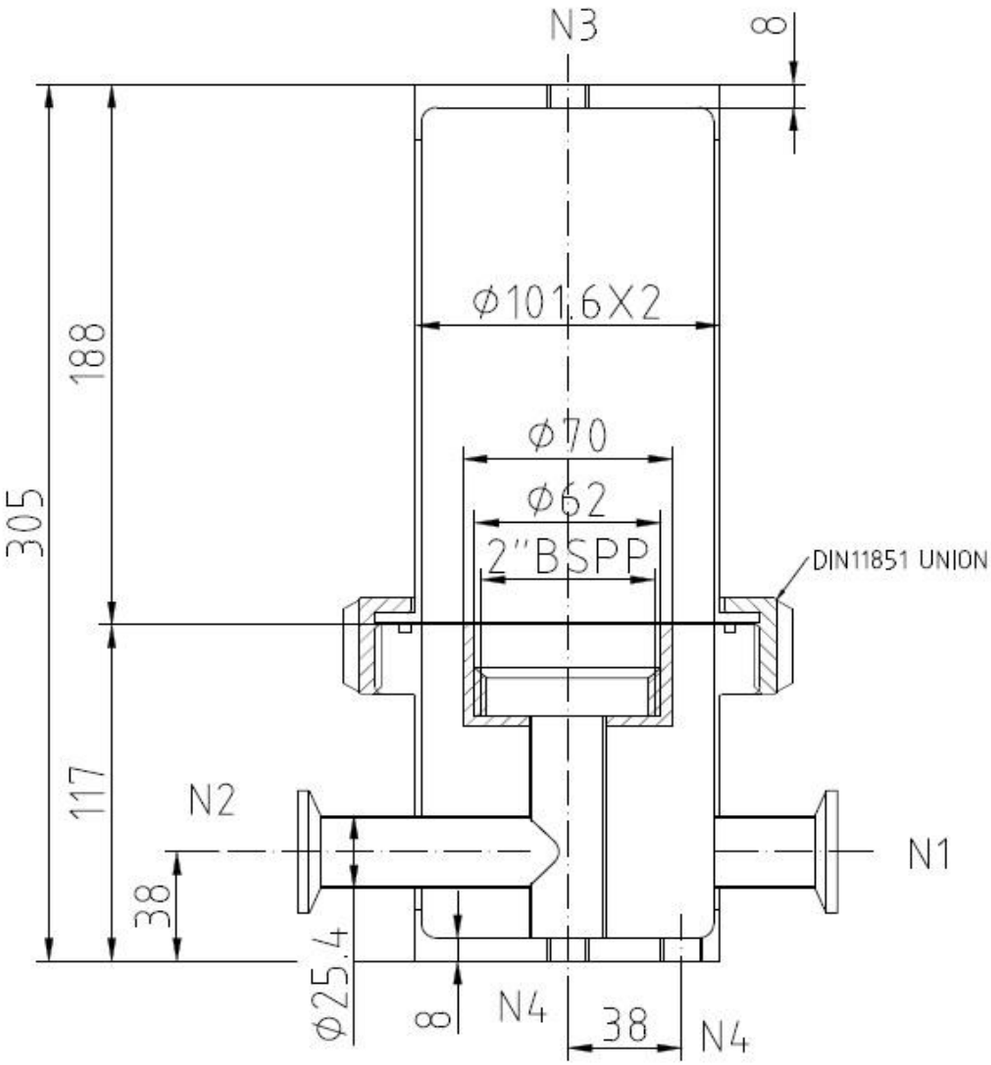

MICROPURE® FILTRATION

Date:	Drawing No
12/1/2024	PDF-0802100T